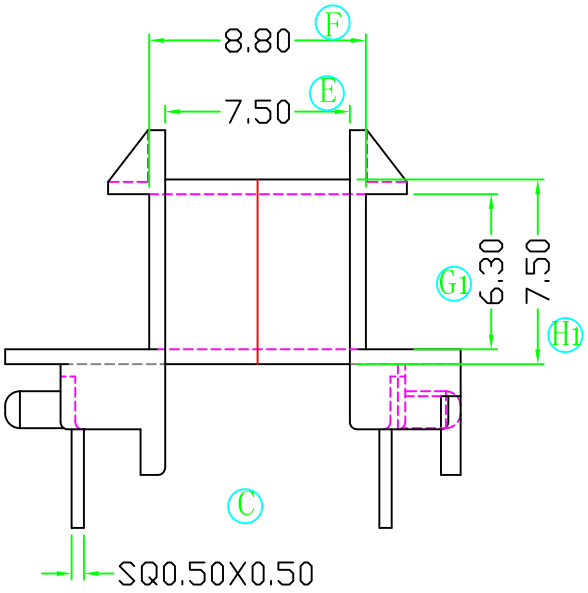
8.80
F
7.50
E
6.30
G1
7.50
H1
C
SQ0.50X0.50

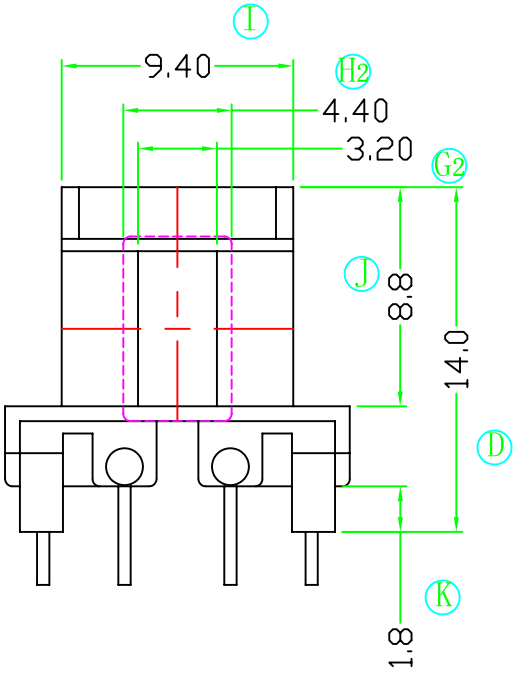
I
9.40
H2
4.40
3.20
G2
J
8.8
14.0
D
K
1.8

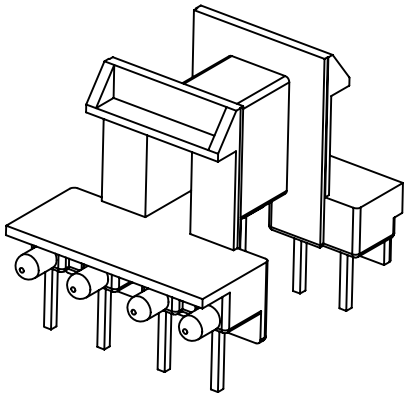

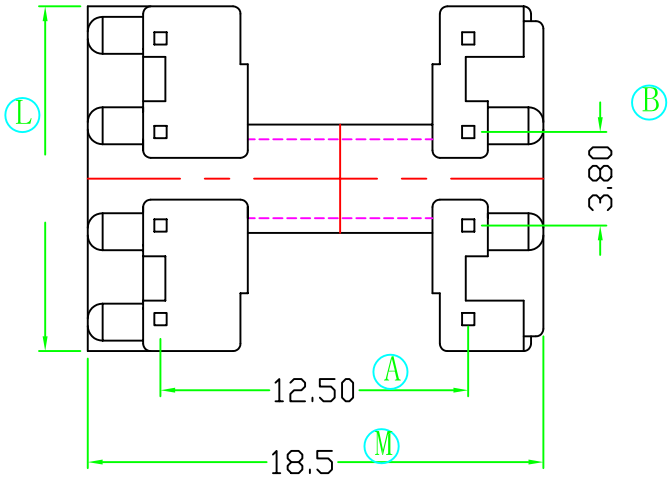
L
B
3.80
12.50
A
18.5
M