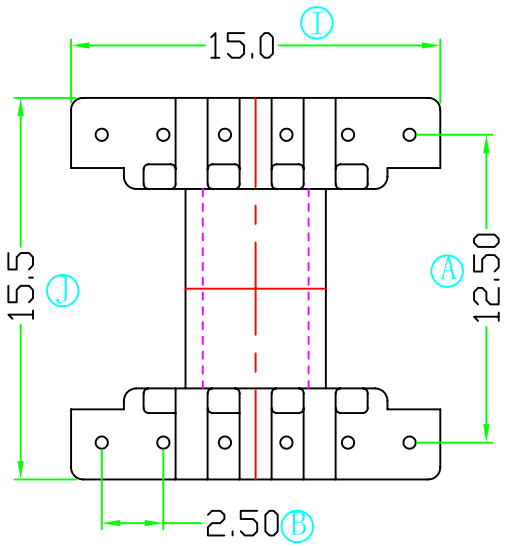
15.0
I
15.5
J
12.50
A
2.50
B

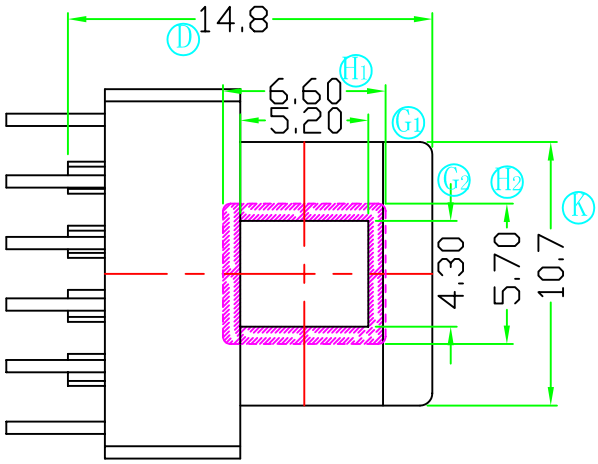
14.8
D
6.60
H1
5.20
G1
G2
H2
K
4.30
5.70
10.7

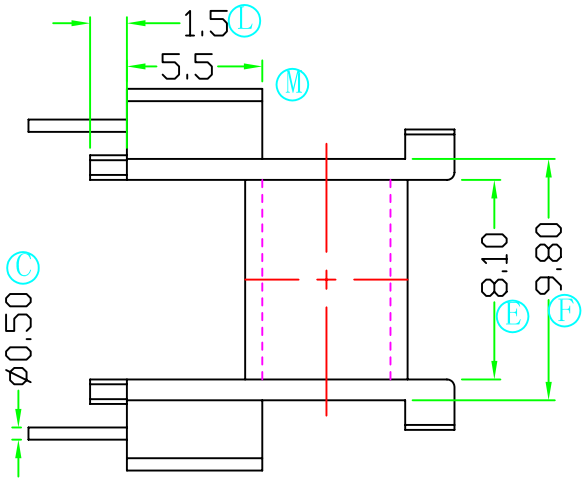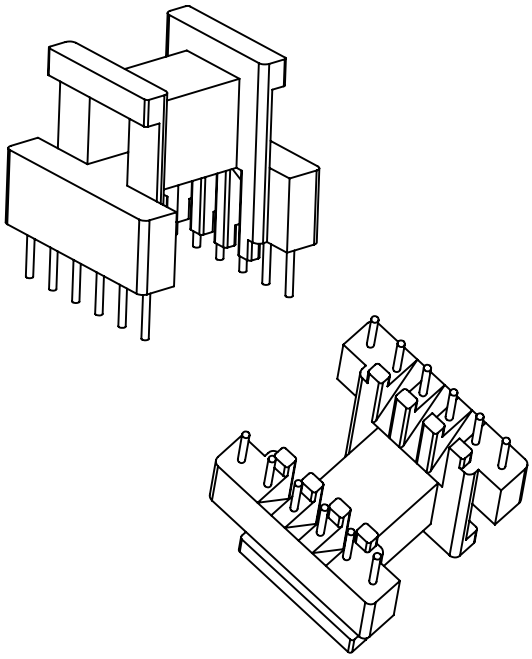
1.5
L
5.5
M
C
ø0.50
8.10
E
9.80
F