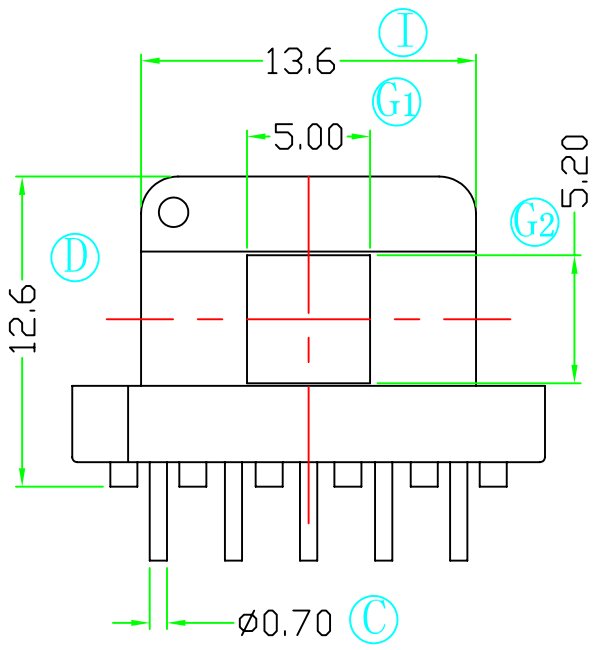
I
13.6
G1
5.00
5.20
G2
D
12.6
ø0.70
C

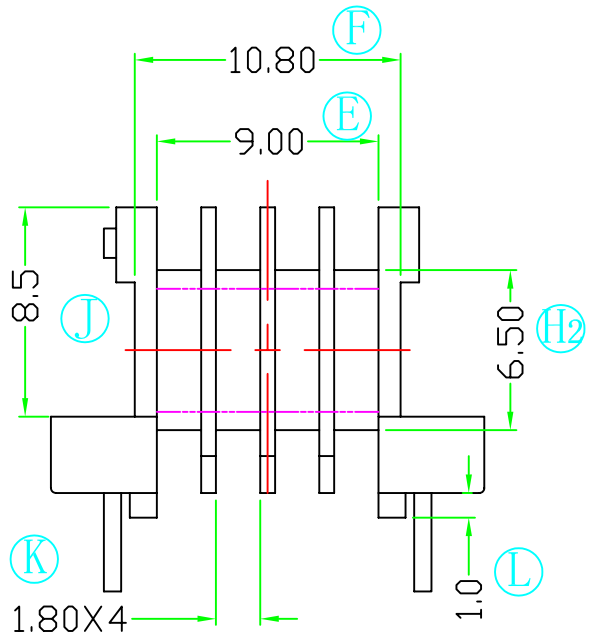
F
10.80
E
9.00
8.5
J
6.50
H2
K
1.80X4
1.0
L

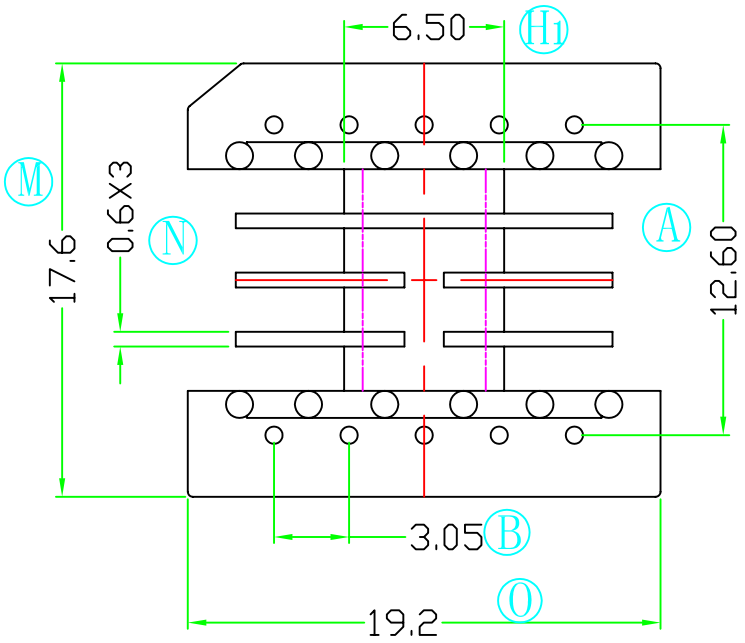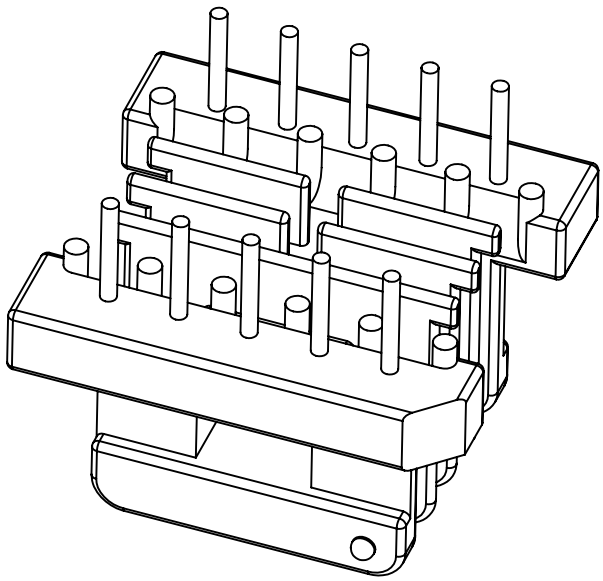
6.50
H1
M
17.6
0.6X3
N
A
12.60
3.05
B
19.2
O