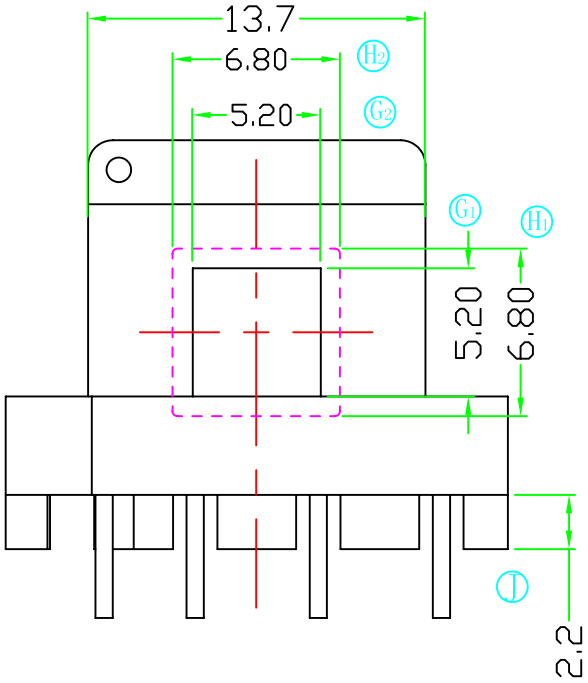
13.7
6.80
5.20
H2
G2
G1
H1
5.20
6.80
J
2.2

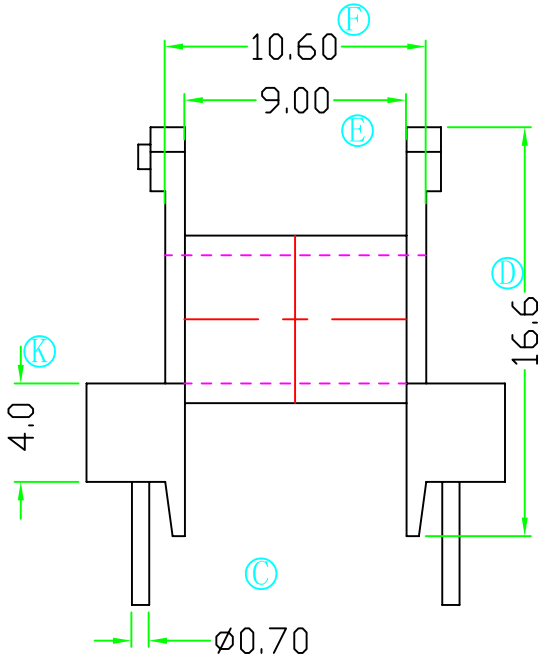
F
10.60
9.00
E
D
16.6
K
4.0
C
Ø0.70

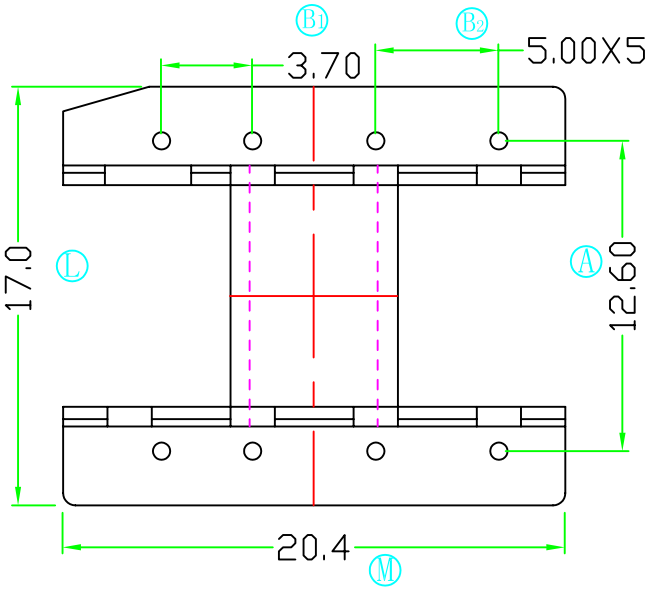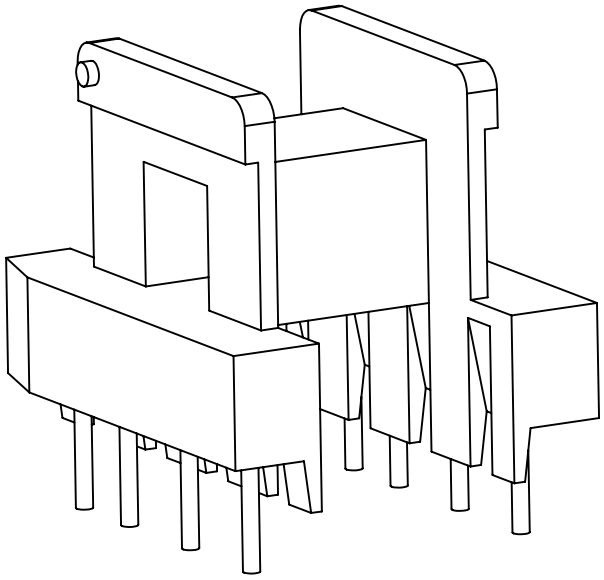
B1
B2
3.70
5.00X5
17.0
L
A
12.60
20.4
M