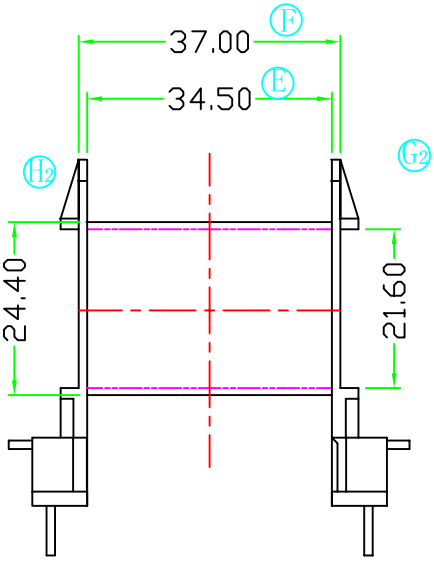
F
37.00
E
34.50
H2
G2
24.40
21.60

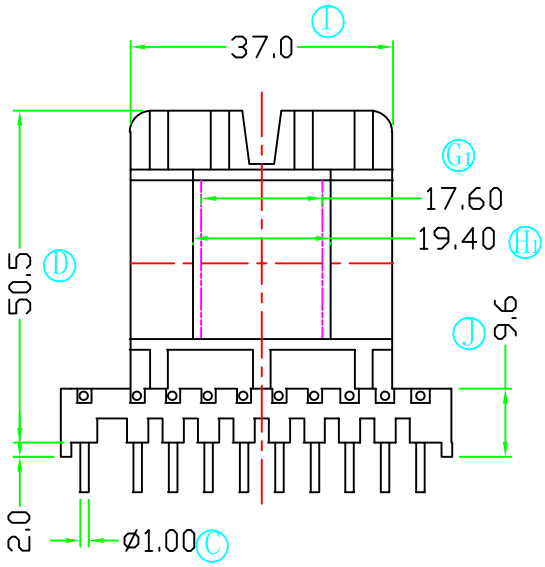
I
37.0
G1
17.60
19.40
H1
50.5
D
J
9.6
2.0
ø1.00
C

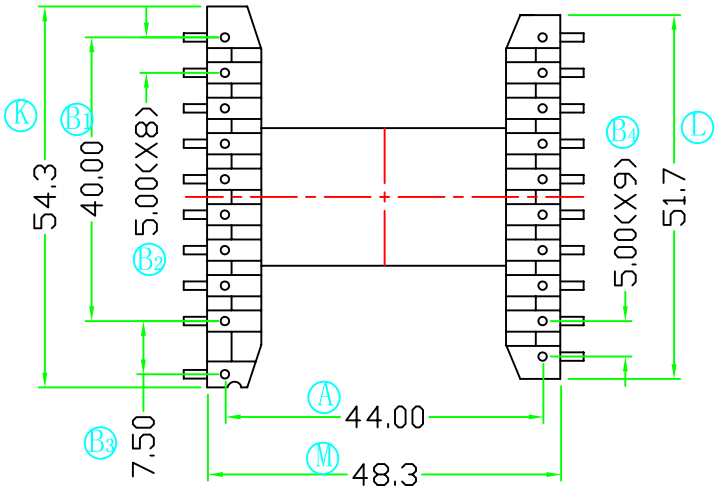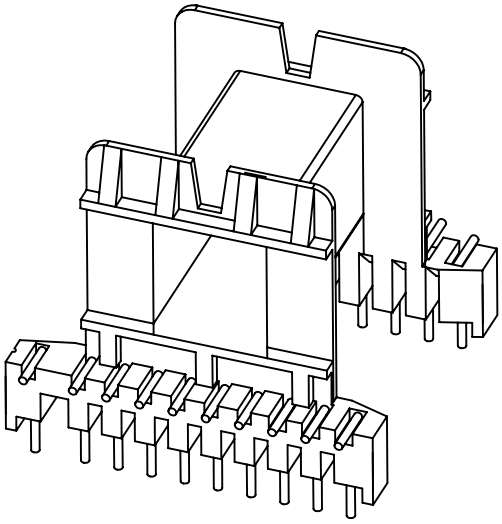
K
B1
54.3
40.00
5.00(X8)
B2
B4
L
5.00(X9)
51.7
A
44.00
B3
7.50
M
48.3